Machine 2D graph

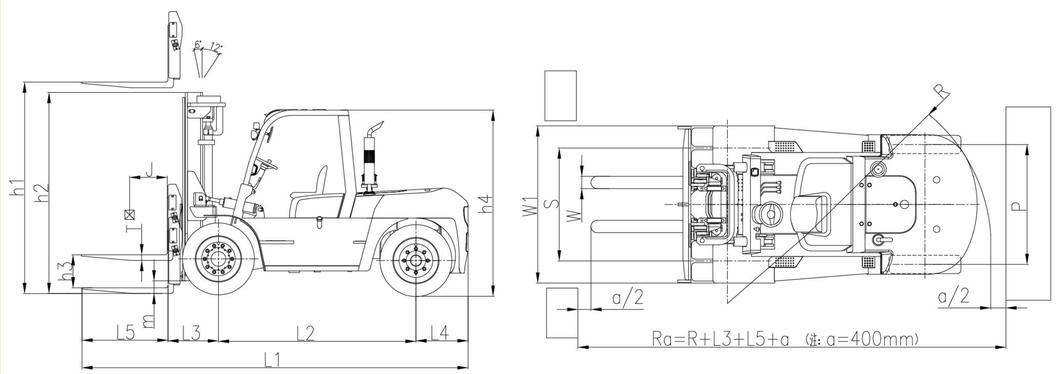

CAPACITY CHART

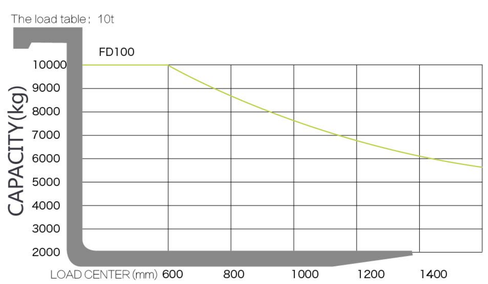

Specification of Optional Engine

Model	Rated Power/Speed	Rated torque	Displacement
-	(kW/r.p.m)	(N · m/r.p.m)	(L)
XiChai CA6110	83/2000	450/1450	7.127
ISUZU 6BG1QC-02	82.4/2000	416.8/1500	6.494
MITSUBISHI S6K-T	82.4/2000	500/1200	6.37
PERKINS 1104D-44TA	83/2200	418/1400	4.4

FD100

DIESEL FORKLIFT

HULKMAN

TECHNICAL FEATURES

Safe & Reliable

- Engine is with large torque and capacity, which is powerful and can meet different operation demands;
- Lifting system is equipped with up and down buffer cylinders, which reduce shock and vibration efficiently;
- The forklifts are nice in appearance with streamline design. They work stably with high efficiency and good grade ability and can be operated in bad working conditions;

Comfort & Practical

- Scientific ergonomic design makes operation more portable and comfortable.
- Seat and backrest are adjustable. Steering wheel tilt angle is also adjustable,
- which leaves more legroom. The portable gearshift is quick to shift and easy to operate;
- Reinforced mast with wide view design improves efficiency and safety, meanwhile enhances anti-force capacity.

M WIDE VIEW STANDARD MAST						
Lifting Height	Capacity	Maximum lift height	Forks landing	Height with Backrest	Free lifting height	Mast Tilt angle F/R
mm	kg	mm	mm	mm	mm	°
3000	10000	3000	2850	4335	220	6/12
3500	10000	3500	3100	4835	220	6/12
4000	9500	4000	3450	5335	220	6/12
4500	9500	4500	3700	5835	220	6/12
5000	9000	5000	3950	6335	220	6/6
5500	8000	5500	4250	6835	220	3/6
6000	7500	6000	4500	7335	220	3/6

DIESEL FORKLIFT FD100

FEATURES		FD100
Power	–	Diesel
Rated Capacity	kg	10000
Center of load	J(mm)	600
Lifting height	h1(mm)	3000
Free lifting height	h3(mm)	220
Forks L×W×H	L5xWxT(mm)	1220×175×80
Tilt Forward/Backward	°	6/12
Min.turning radius	R(mm)	4280
Min.Right Angle Aisle Width	Rb(mm)	3514
Min.ground clearance(Mast)	Ra(mm)	6615
ground clearance(Mast)	m(mm)	250
Overhead guard height	h4(mm)	2600
Front overhang	L3(mm)	715
Rear overhang	L4(mm)	740
PERFORMANCE		
Max.traveling speed(loaded)	km/h	20
Max.lifting speed(loaded/empty)	mm/s	290/350
Drawbar pull	kN	57
Gradeability	%	20
SIZE		
Overall length (with fork)	L1(mm)	5475
Overall width	W1(mm)	2230
Mast lowered height	h2(mm)	4335
Mast extended height	mm	2850
CHASSIS		
Tire Front	–	9.00-20-14PR
Tire Rear	–	9.00-20-14PR
Wheelbase	L2(mm)	2800
Tread width(Front/Rear)	S/P(mm)	1600/1700
Curb weight(None-load)	kg	12500
ENGINE		
Battery(Voltage/Capacity)	V/Ah	(12/90)x2
Engine(Model)	–	XinChai6110
Engine(Rated power)	kW/r.p.m	83/2000
Engine(Rated torque)	N.m/r.p.m	450/1450
Engine(Cylinder amount)	mm	110×125
Engine(Bore×Stroke)	–	6
Engine(Displacement)	L	7.127
Fuel tank	L	140
Transmission	–	2/2 Manual Shift
Working pressure	MPa	20

STANDARD CONFIGURATION			OPTIONS		ATTACHMENT	
Wideview mast Standard fork Backrest Overhead guard Oil pressure indicator Rearview mirror Timer Fuel Gauge Air intake system Oil scale in torque Double filter	2 piece multi valve Tornado air filter Speed limit valve Handle Toolbox Rubber pad Traction pin Electric Horn Standard seat Parking brake High exhaust	Adjustable steering wheel Lifting & tilting handle Water temperature gauge Hydraulic oil level gauge Hydraulic oil return filter Rir spring rod for hood Durable pneumatic tire Turning signal Engine flameout device Hydraulic powered steering Double front tire and protector	☐ Luxury seat ☐ Cab ☐ Heater ☐ Fork cover ☐ Solid tyre ☐ Windshield ☐ Oil-bath double filter(on overheadguard)	☐ Rotary work alarming light ☐ Exhaust smoke purification muffler ☐ Two/three stage full-free mast ☐ Fire extinguishing muffler	☐ Side shifter ☐ Fork positioner ☐ Hinged fork ☐ Carpet boom ☐ Extended fork ☐ Fork cover ☐ Lifting boom ☐ Paper roll clamp ☐ Bale clamp ☐ Rotator	☐ Barrel clamp ☐ Tipping fork and bucket

The compamy reserve the right for specification change; Should any revision on specification, a further notice shall prevail.