Machine 2D graph

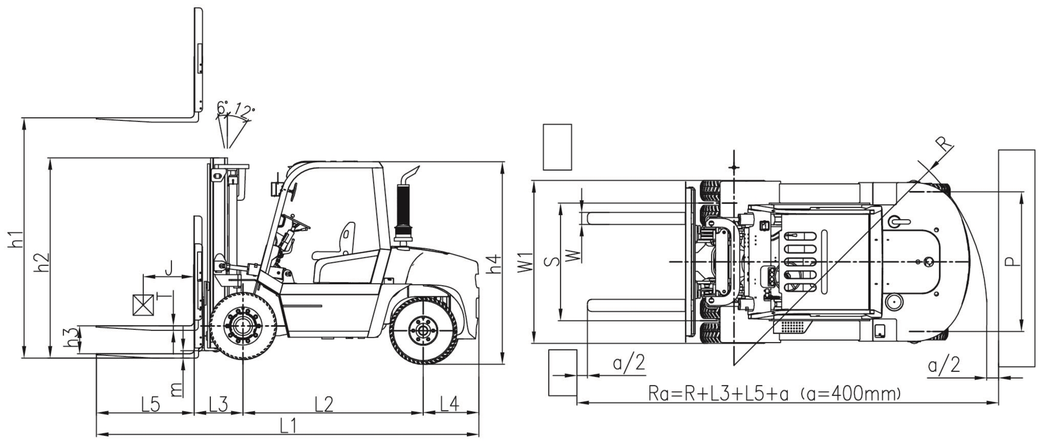

CAPACITY CHART

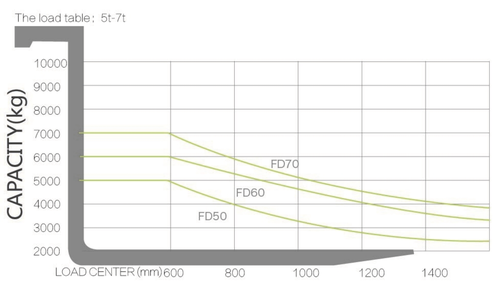

Specification of Optional Engine

Model	Rated Power/Speed	Rated torque	Displacement
-	(kW/r.p.m)	(N · m/r.p.m)	(L)
PERKINS 1104D-44TA	83/2200	418/1400	4.4
MITSUBISHIS6S	52/2300	248/1700	4.994
XICAICA6110	83/2000	450/1450	7.127
CHAOCHAI6102BG	81/2500	353/1700	5.785
ISUZU6BG1QC-02	82.4/2000	416.8/1500	6.494
PERKINS 1104C-44T	74.5/2200	415/1350	4.4

FD50/60/70

DIESEL FORKLIFT

HULKMAN

TECHNICAL FEATURES

Safe & Reliable

- Engine is with large torque and capacity, which is powerful and can meet different operation demands;
- Lifting system is equipped with up and down buffer cylinders, which reduce shock and vibration efficiently;
- Hydraulic system is equipped with the throttling valve, which makes operation safe and reliable;
- Reinforced mast with wide view design improves efficiency and safety meanwhile enhances anti-force capacity.
- The forklifts are nice in appearance with streamline design. They work stably with high efficiency and good grade ability and can be operated in bad working conditions.

Comfort & Efficient

- Integrated overhead guard is adopted. The canopy is one time stamping part with 5 pieces transparent plastic cover, which receives sufficient light and keeps rain out;
- Big power engine in V type installation can reduce the vibration;
- Scientific ergonomic design makes operation more portable and comfortable. Seat and backrest are adjustable. Steering wheel tilt angle is also adjustable, which leaves more legroom. The portable gearshift is quick to shift and easy to operate.

M WIDE VIEW STANDARD MAST / Z 2-STAGE FULL FREE MAST

Lifting	Capacity			Mast height		Free lifting height			Mast Tilt
Height	5T	6T	7T	Forks landing	Height with Backrest	5T	6T	7T	angle F/R
mm	kg	kg	kg	mm	mm	mm	mm	mm	°
3000	5000	6000	7000	2500*2560	4417*4426	203*1189	208*1193	218*1204	6/12
3500	5000	6000	7000	2750*2810	4917*4926	203*1439	208*1443	218*1454	6/12
4000	5000	6000	6800	3050*3110	5417*5426	203*1739	208*1743	218*1754	6/12
4500	4800	5800	6600	3300*3360	5917*5926	203*1989	208*1993	218*2004	6/6
5000	4600	5500	6300	3550*3610	6417*6426	203*2239	208*2243	218*2254	6/6
5500	4500	5400	6200	3850*3910	6917*6926	203*2539	208*2543	218*2554	3/6
6000	4400	5200	6000	4100*4160	7417*7426	203*2789	208*2793	218*2804	3/6

Remark: * 2-stage full free mast ; free lifting height without backrest(2-stage full free): 5T-6T +410mm , 7T +247mm ;
height without backrest, Standard: 5-6T -420mm, 7T -299mm, 2-stage full free : 5-6T -410mm, 7T -280mm .

S 3-STAGE FULL FREE MAST

Lifting	Capacity			Mast height		Free lifting height			Mast Tilt
Height	5T	6T	7T	Forks landing	Height with Backrest	5T	6T	7T	angle F/R
mm	kg	kg	kg	mm	mm	mm	mm	mm	°
4000	4800	5800	6800	2475	5420	1104	1108	1118	6/6
4350	4500	5500	6500	2590	5767	1219	1223	1233	6/6
4500	4500	5500	6500	2640	5917	1269	1273	1283	6/6
4800	4500	5500	6500	2740	6217	1369	1373	1383	6/6
5000	4500	5500	6500	2805	6410	1434	1438	1448	6/6
6000	4000	5000	6000	3190	7410	1819	1823	1833	3/6

Remark:height without backrest, Standard: 5T-6T-331mm, 7T-263mm
free lifting height without backrest: 5T-6T+433mm,7T+236mm

DIESEL FORKLIFT FD50/60/70

FEATURES		FD50	FD60	FD70
Power	—	Diesel	Diesel	Diesel
Rated Capacity	kg	5000	6000	7000
Center of load	J(mm)	600	600	600
Lifting height	h1(mm)	3000	3000	3000
Free lifting height	h3(mm)	203	208	218
Forks L×W×H	L5xWxT(mm)	1220×150×55	1220×150×60	1220×150×70
Tilt Forward/Backward	°	6/12	6/12	6/12
Min.turning radius	R(mm)	3320/3415(XiChai6110)	3420/3507 (XiChai6110)	3420/3507(XiChai6110)
Min.ground clearance(Mast)	Ra(mm)	5550/5645(XiChai6110)	5655/5742 (XiChai6110)	5665/5752(XiChai6110)
ground clearance(Mast)	m(mm)	200	200	200
Overhead guard height	h4(mm)	2460	2460	2460
Front overhang	L3(mm)	610	615	625
Rear overhang	L4(mm)	566	692	692
PERFORMANCE				
Max.traveling speed(loaded)	km/h	26	26	26
Max.lifting speed(loaded/empty)	mm/s	370/450	370/450	350/450
Drawbar pull	kN	51.4	51.4	51.4
Gradeability	%	20	20	20
SIZE				
Overall length (without fork)	L1(mm)	4646 /4736(XiChai6110)	4677//4767 (XiChai6110)	4687/4777(XiChai6110)
Overall width	W1(mm)	2000	2000	2000
Mast lowered height	h2(mm)	4417	4417	4417
Mast extended height	mm	2500	2500	2500
CHASSIS				
Tire Front	—	8.25-15-14PR	8.25-15-14PR	8.25-15-14PR
Tire Rear	—	8.25-15-14PR	8.25-15-14PR	8.25-15-14PR
Wheelbase	L2(mm)	2250/2340 (XiChai6110)	2250/2340 (XiChai6110)	2250/2340 (XiChai6110)
Tread width(Front/Rear)	S/P(mm)	1470/1700	1470/1700	1470/1700
Curb weight(None-load)	kg	7980	8640	9340
ENGINE				
Battery(Voltage/Capacity)	V/Ah	(12/90)x2	(12/90)x2	(12/90)x2
Engine(Model)	—	XiChaiCA6110	XiChaiCA6110	XiChaiCA6110
Engine(Rated power)	kw/r.p.m	83/2000	83/2000	83/2000
Engine(Rated torque)	N.m/r.p.m	450/1450	450/1450	450/1450
Engine(Cylinder amount)	mm	110×125	110×125	110×125
Engine(Bore×Stroke)	-	6	6	6
Engine(Displacement)	L	7.127	7.127	7.127
Fuel tank	L	140	140	140
Transmission	—	2/2 Manual Shift	2/2 Manual Shift	2/2 Manual Shift
Working pressure	MPa	20	20	20

STANDARD CONFIGURATION

Wideview mast
Standard fork
Standard seat
Rearview mirror
High exhaust
Light switch
Electric Horn
2 piece multi valve
Lifting & tilting handle
Traction pin
Toolbox
Rubber pad
Tornado air filter
Handle
Rear lamp
Timer
Neutral indicator
Parking brake
Turning signal
Headlamp
Double filter
Durable pneumatic tire
Integral Overhead guard
Adjustable steering wheel
Tilt oil passage self-locking valve
Water temperature gauge
Engine flameout device
Hydraulic oil level gauge
Oil pressure indicator
Hydraulic powered steering

OPTIONS

- ☐ Windshield
- ☐ Cab
- ☐ Heater
- ☐ Solid tyre
- ☐ Fan
- ☐ Fire extinguisher
- ☐ Optional painting
- ☐ Purification muffler
- ☐ Fire extinguishing muffler
- ☐ Rotary work alarming light
- ☐ Two/three stage full-free mast
- ☐ Oil-bath double filter(on overheadguard)

ATTACHMENT

- ☐ Side shifter
- ☐ Fork positioner
- ☐ Hinged fork
- ☐ Carpet boom
- ☐ Extended fork
- ☐ Fork cover
- ☐ Lifting boom
- ☐ Paper roll clamp
- ☐ Bale clamp
- ☐ Rotator
- ☐ Barrel clamp
- ☐ Tipping fork and bucket

The compamy reserve the right for specification change; Should any revision on specification, a further notice shall prevail.